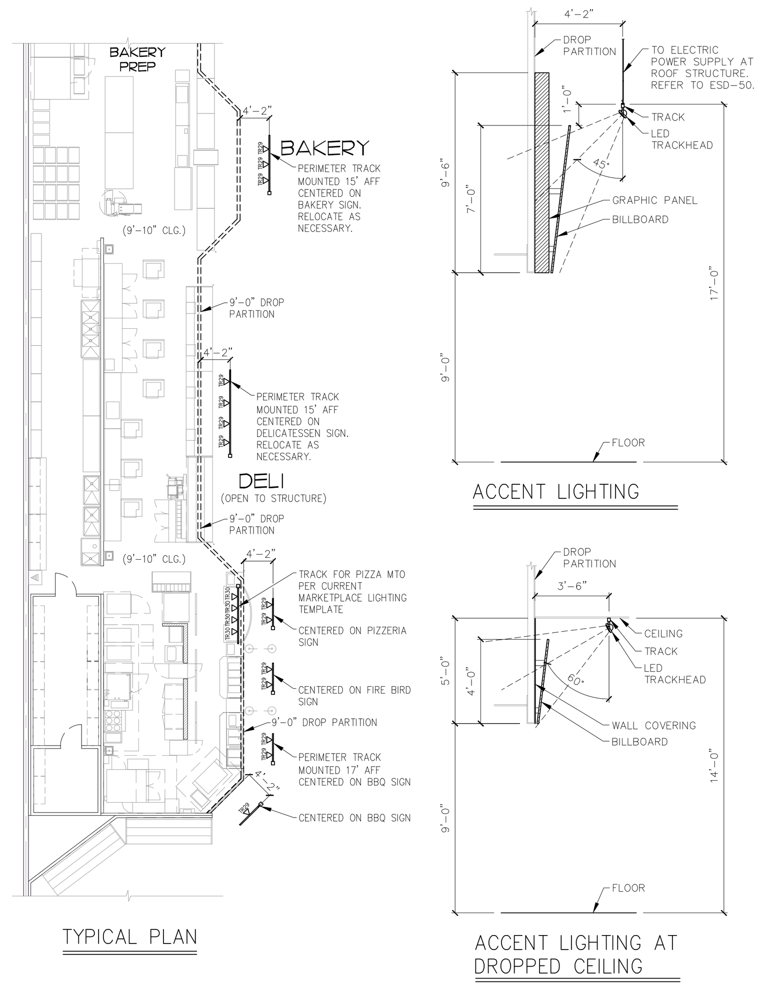

NOTE:
NO TRACK LIGHTS AT CEILINGS BELOW 14'-0"

LIGHTING DETAILS – DECOR	DATE: 4/9/18 SCALE: NONE DRAWN: ZAW
MASTER SPECIFICATION DETAIL	ESD-48

ORIGINAL ISSUE DATE 04/09/18

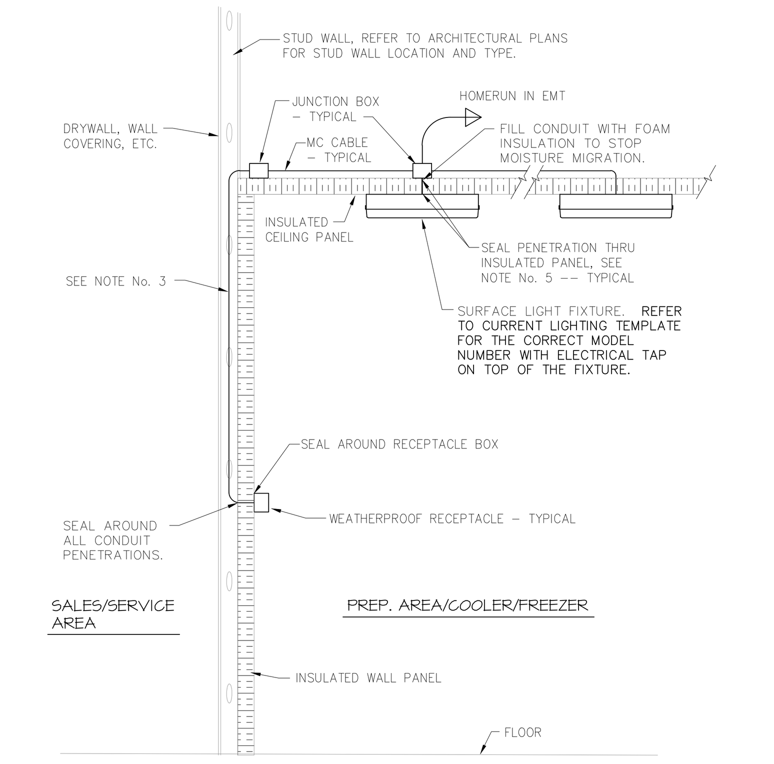

NOTES:

1. EXPOSED SURFACE MOUNTED CONDUITS WILL NOT BE PERMITTED IN ANY PREP. ROOMS, COOLERS OR FREEZERS.
2. ALL CONDUITS TO STAB THRU PREFABRICATED INSULATED PANEL TO COVERED IN-USE WEATHERPROOF RECEPTACLE WITHIN.
3. MC CABLE PERMITTED IN WALL CAVITY THAT IS ACCESSIBLE FOR FUTURE REWORK OF RECEPTACLES, INSTALL WIRING IN ACCORDANCE WITH SPEC. SECTION 26 05 19. EMT TO BE USED IN ALL WALLS WHERE INACCESSIBLE IN FUTURE AND WITHOUT STUD WALL, SURFACE MOUNTED CONDUIT ON PREFAB PANELS EXPOSED IN BACK ROOM PROTECTED BY CONCRETE CURB.
4. LIGHTING ELECTRICAL FEED THRU TOP MOUNTED JUNCTION BOX AND FIRST FIXTURE THEN FIXTURE TO FIXTURE VIA CONDUIT MOUNTED ON TOP OF PREFABRICATED INSULATED PANEL. REPEAT AS REQUIRED FOR EACH ADDITIONAL LIGHT FIXTURE OR LIGHT FIXTURE ROW.
5. SEAL AROUND ALL RECEPTACLES AND ALL ELECTRICAL PENETRATIONS THRU INSULATED PANELS WITH CLEAR SILICONE CAULK. SEAL ON BOTH SIDES.

CONDUIT INSTALL. FOR AREAS WITH PREFAB. INSULATED PANEL CEILING	DATE: 11/10/16 SCALE: NONE DRAWN: ZAW
MASTER SPECIFICATION DETAIL	ESD-26

ORIGINAL ISSUE DATE 10/1/09

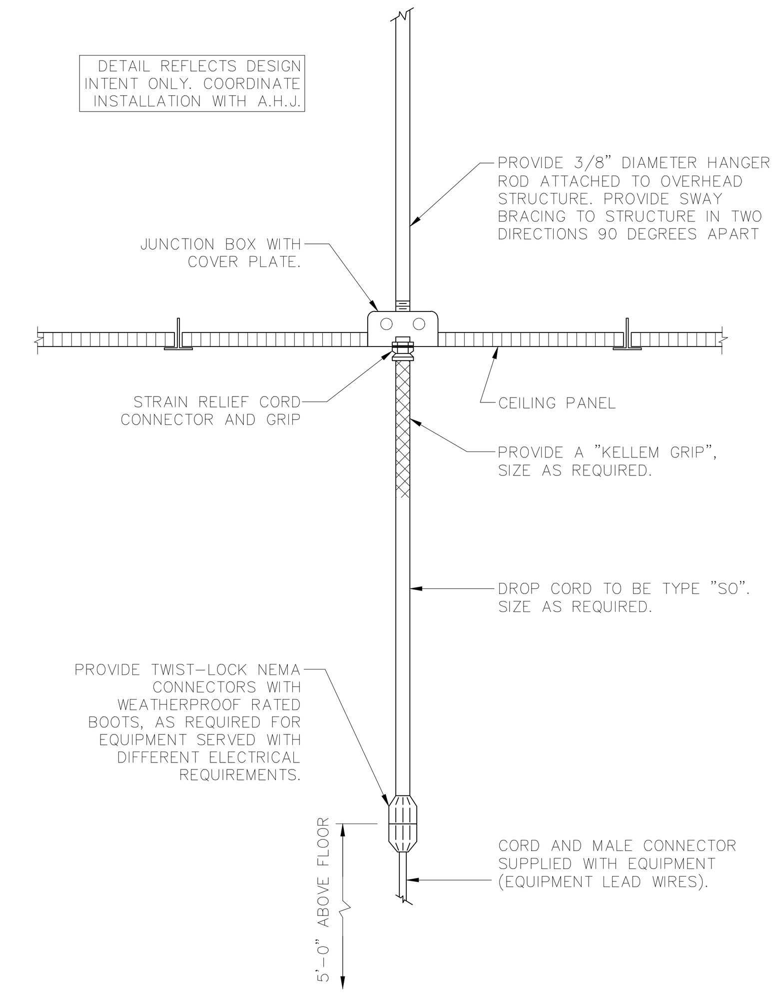

PENDENT RECEPTACLE FOR SUSPENDED CEILING	DATE: 4/5/23 SCALE: NONE DRAWN: JDB
MASTER SPECIFICATION DETAIL	ESD-16

ORIGINAL ISSUE DATE 2/20/06

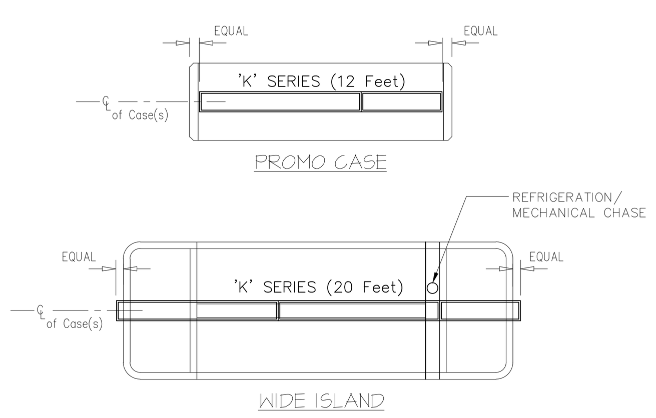

NOTICES:

REFER TO CURRENT LIGHTING REFERENCE DRAWINGS FOR ADDITIONAL INFORMATION AND CURRENT LIGHTING SPECIFICATIONS.
LIGHT FIXTURE TO BE CENTERED OVER CASE. COORDINATE WITH FINAL FIXTURE PLACEMENT.
LIGHT FIXTURE TO BE SUSPENDED 7'-6" AFF.
COORDINATE LIGHT FIXTURE PLACEMENT WITH REFRIGERATION/MECHANICAL CHASE.

ISLAND CASE LIGHT PLACEMENT	DATE: 5/31/23 SCALE: NONE DRAWN: JDB
MASTER SPECIFICATION DETAIL	ESD-47

ORIGINAL ISSUE DATE 2/20/06

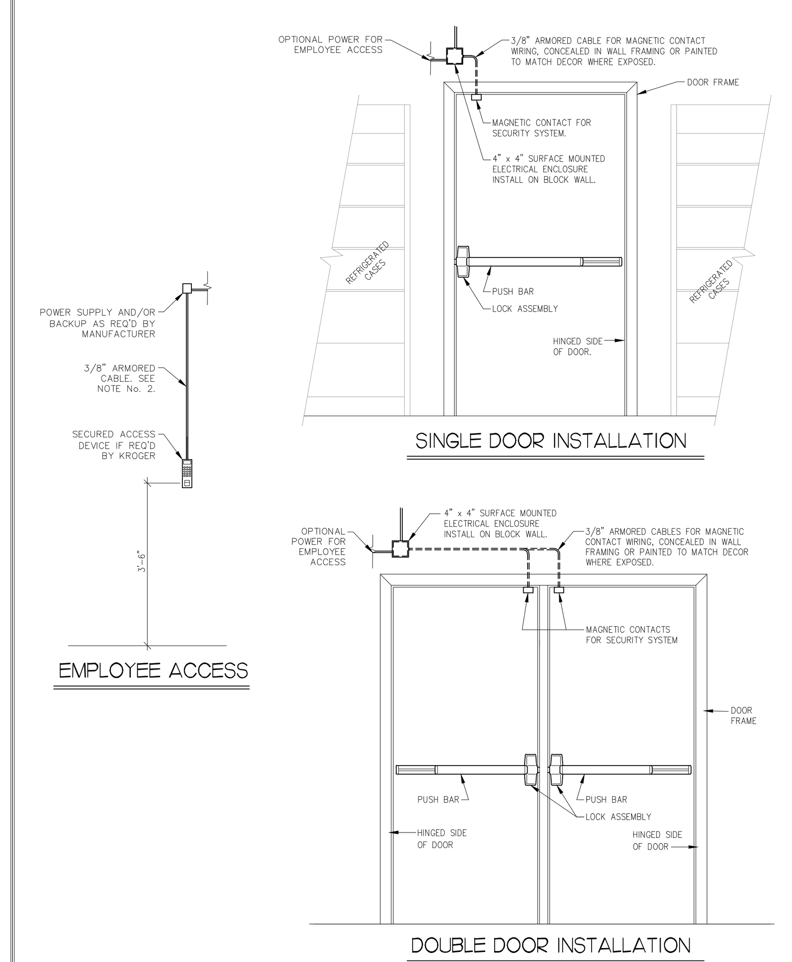

NOTES:

1. CONTRACTOR SUPPLIED ITEMS: 1/2 CONDUIT, 3/8" ARMORED CABLE, HARDWARE, 7/8" x 7/16" WIREMOLD (400BAC or EQUAL), 4" x 4" ELECTRICAL JUNCTION BOX
2. WIRING CONCEALED IN WALL FRAMING IN FINISHED AREAS OR PAINTED TO MATCH DECOR WHERE EXPOSED.

ALARMED EMERGENCY SINGLE AND DOUBLE EXIT DOOR (HOLLOW METAL)	DATE: 5/31/23 SCALE: NONE DRAWN: JDB
MASTER SPECIFICATION DETAIL	ESD-22

ORIGINAL ISSUE DATE 7/6/06

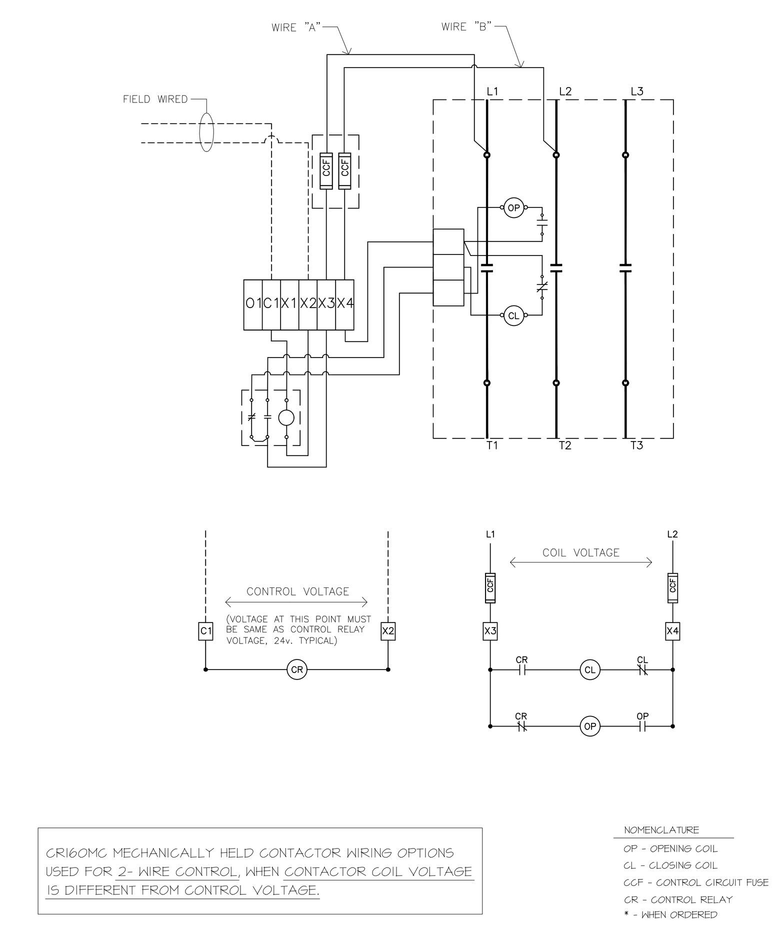

CR160MC MECHANICALLY HELD CONTACTOR WIRING OPTIONS USED FOR 2- WIRE CONTROL, WHEN CONTACTOR COIL VOLTAGE IS DIFFERENT FROM CONTROL VOLTAGE.

NOMENCLATURE
OP - OPENING COIL
CL - CLOSING COIL
CCF - CONTROL CIRCUIT FUSE
CR - CONTROL RELAY
* - WHEN ORDERED

Note:
REFER TO THE NATIONAL ELECTRIC CODE OR LOCAL ELECTRIC CODE AS REQUIRED.

LIGHTING CONTACTOR WIRING DIAGRAM	DATE: 7/8/10 SCALE: NONE DRAWN: jq
MASTER SPECIFICATION DETAIL	ESD-13

ORIGINAL ISSUE DATE 7/8/10

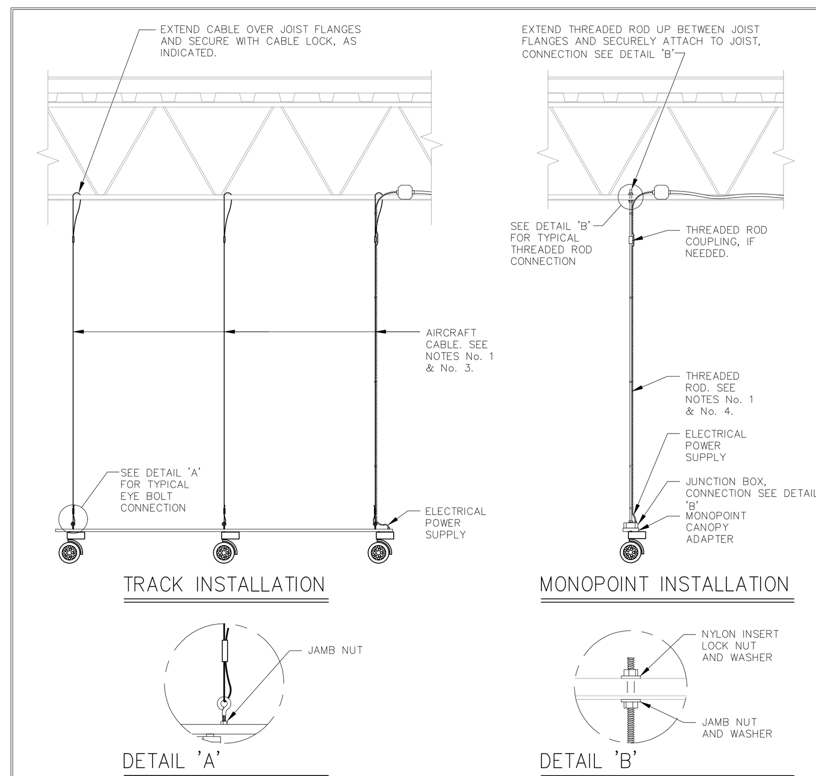

NOTES:

1. THIS DETAIL IS ASSOCIATED WITH THE INSTALLATION OF TR15, TR16, TR17, TR18 AND TR19 LED TRACK LIGHT FIXTURES. HANG ELECTRIFIED TRACK FOR MULTIPLE FIXTURES WITH AIRCRAFT CABLE AND THREADED ROD FOR MONOPOINT FIXTURE INSTALLATION. THREADED ROD SHOULD BE USED TO SUPPORT ELECTRIFIED TRACK AT LOCATIONS WHERE HVAC DIFFUSERS CAN CAUSE TRACK TO SWAY.
2. FIXTURE SUPPORT AND POWER CONNECTION FURNISHED AND INSTALLED BY THE ELECTRICAL CONTRACTOR AS REQUIRED BY GOVERNING CODES.
3. INSTALL ELECTRIFIED TRACK WITH MIN 1/16" DIAMETER STANDARD STEEL WIRE ROPE OR STAINLESS STEEL AIRCRAFT CABLE WITH CABLE LOCK CONNECTED TO 1/4" EYE BOLT THRU FACTORY DRILLED HOLES WITH LOCK NUT WITH NYLON INSERT ON BOTTOM AND STANDARD JAMB NUT ON TOP OF THE TRACK. 4' TRACK TO BE INSTALLED BY 2 POINTS OF ATTACHMENT, 8' BY 3 POINTS AND 12' BY 4 POINTS.
4. MONOPOINT FIXTURE TO BE HUNG BY 1/4" THREADED ROD ATTACHED TO STEEL AND JUNCTION BOX. FOR LONGER DROPS INSTALL THREADED COUPLING AS HIGH AS POSSIBLE. ATTACH TO BOTTOM CHORD OF JOIST BY EXTENDING THREADED ROD BETWEEN JOIST FLANGES AND HOLE IN JUNCTION BOX BY ATTACHING WITH LOCK NUT WITH NYLON INSERT ON TOP AND STANDARD JAMB NUT & WASHER ON BOTTOM.
5. WHERE MOUNTING CABLE OR THREADED ROD MISSES EXISTING STRUCTURAL STEEL, PROVIDE & SECURELY ATTACH METAL SUPPORT BETWEEN STEEL USING STEEL CHANNEL 7/8" MIN, 1" x 1" ANGLE IRON OR 3/4" IMC OR RIGID CONDUIT.
6. LIGHT TRACK LENGTH AND HEIGHT ABOVE FLOOR VARIES PER LOCATION. REFER TO LIGHTING PLAN FOR MOUNTING HEIGHT AND LOCATIONS.

LED TRACK LIGHT & MONOPOINT DETAIL	DATE: 11/5/13 SCALE: NONE DRAWN: ZAW
MASTER SPECIFICATION DETAIL	ESD-50

ORIGINAL ISSUE DATE 11/2/12

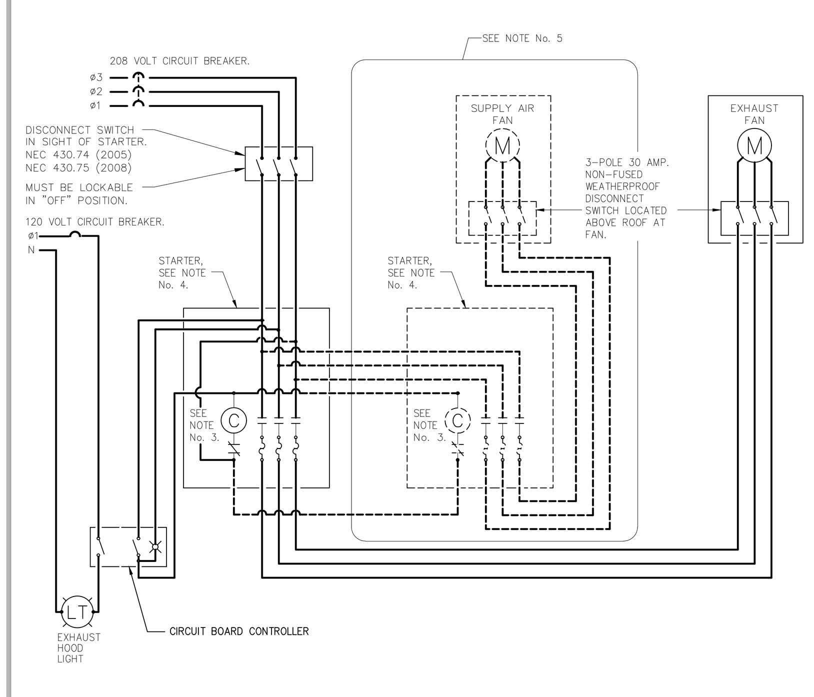

NOTES:

1. BOLD LINES INDICATE FIELD WIRING.
2. CONTROL CIRCUIT WIRING SHALL BE MINIMUM OF No. 12 AWG.
3. COIL SHALL BE ORDERED FOR 208 VOLT.
4. A.C. MAGNETIC STARTER WITH OVERLOAD RELAYS & NEMA TYPE 1 ENCLOSURE. PROJECT DESIGN ENGINEER TO SHOW STARTERS ON ELECTRICAL SINGLE LINE DIAGRAM.
5. DASHED ELEMENTS SHALL BE PROVIDED WHEN SUPPLY AIR FAN IS REQUIRED FOR COMPENSATING HOOD. SEE H.V.A.C. and ELECTRICAL PLANS.
6. WALL SWITCHES TO BE LOCATED TO PROVIDE READY ACCESS. DO NOT LOCATE BEHIND EQUIPMENT THAT WOULD PREVENT VISUAL AND SAFE ACCESS. COORDINATE LOCATIONS WITH PROJECT FIXTURE PLAN.

FAN WIRING DIAGRAM FOR EXHAUST HOODS	DATE: 6/5/15 SCALE: NONE DRAWN: ZAW
MASTER SPECIFICATION DETAIL	ESD-35

ORIGINAL ISSUE DATE 6/6/08

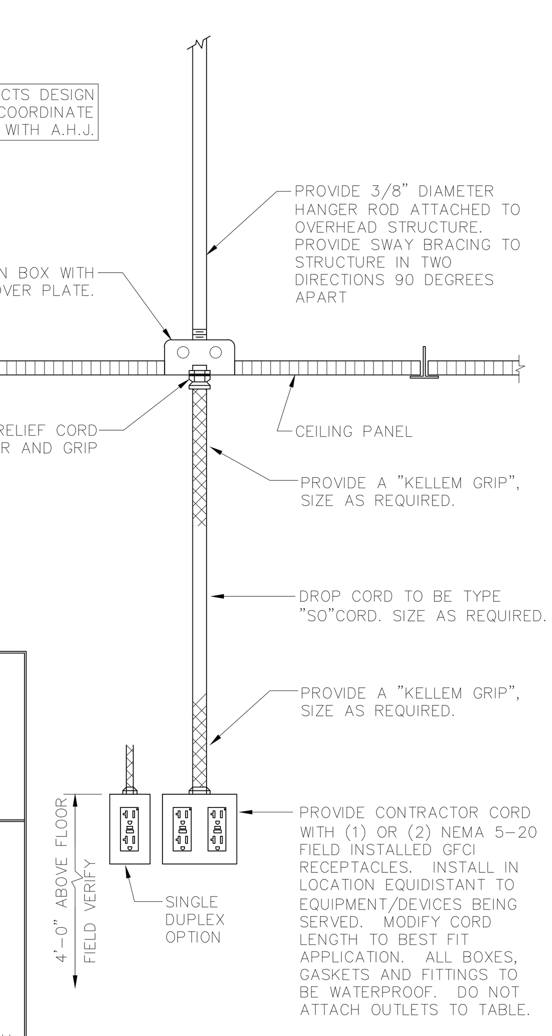

NOTE:
CORD DROP SHALL BE FIELD COORDINATED TO OPERATE 1 TO 3 CIRCUITS. PROVIDE HANDLE TIES AS NECESSARY FOR SIMULTANEOUS BREAKER DISCONNECT. REFER TO CHART BELOW FOR SO TYPE.

1 CIRCUIT, 1 TO 2 DEVICES: 3 WIRE SO, (1) DUPLEX.

1 CIRCUIT 3-4 DEVICES: 3 WIRE SO, (2) DUPLEX.

2 CIRCUIT, 1 TO 2 DEVICES: 4 WIRE SO, (1) DUPLEX WITH TABS CUT.

2 CIRCUIT 3-4 DEVICES: 4 WIRE SO, (2) DUPLEX, EACH TO ONE CIRCUIT.

3 CIRCUIT 3-4 DEVICES: 5 WIRE SO, (2) DUPLEX, (1) WITH TABS CUT.

PENDENT MULTI RECEPTACLE FOR CEILING	DATE: 4/5/23 SCALE: NONE DRAWN: JDB
MASTER SPECIFICATION DETAIL	ESD-16A

ORIGINAL ISSUE DATE 10/9/13

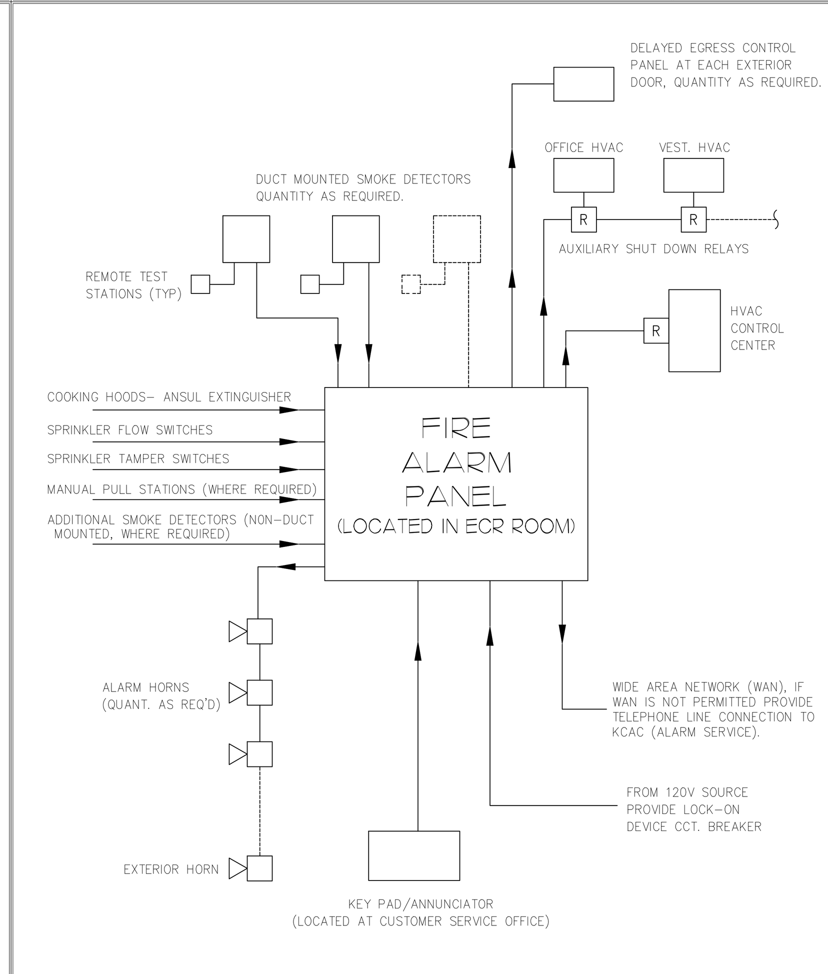

SEE BUILDING SPECIFICATIONS -- SECTION 21 FIRE SUPPRESSION
-- SECTION 28 FIRE ALARM/SECURITY SYSTEM

ALARM SYSTEM SINGLE LINE DIAGRAM	DATE: 1/14/13 SCALE: NONE DRAWN: ZAW
MASTER SPECIFICATION DETAIL	ESD-5

ORIGINAL ISSUE DATE 12/22/80

- FOR REFERENCE ONLY -

issued for: BIDS AND PERMITS 06/12/2025
90% OWNER REIVEW 05/16/2025

PROPOSED MINOR INTERIOR REMODEL FOR:

Kroger

STORE NO. D-663

26130 GRATIOT AVE,
ROSEVILLE, MI 48066

THE KROGER CO. OF MICHIGAN

jeffery a. scott architects p.c.

32316 grand river ave. suite 200
farmington, michigan 48336-3261
(248) 476-8800 fax (248) 476-8833

ELECTRICAL STANDARD DETAILS

project no.	sheet no.
24007	E5.1.1

PLOT FULL SIZE @ 30"x42"

copyright © 2025